Policy for Design, Installation, & Maintenance of FOG Removal Systems

September 13, 2016

Evansville
WATER AND SEWER UTILITY

Policy for Design, Installation, & Maintenance of FOG Removal Systems

September 13, 2016

Prepared By:

Harry Lawson	Wastewater Superintendent
Jeff Merrick	Chief Regulatory Compliance Officer
Matt McBride	FOG Coordinator
Kevin Kolb	Laboratory Pretreatment Manager
Jesse Bernal	FOG Inspector
Carl Gist	CSO Compliance Manager
Stephen Winfield	CMOM Manager
David Ballew	Building Inspector
Chip Altstadt	Altstadt Plumbing
Nathan Bass	Hydromax USA
Thomas Bernardin, P.E.	Three I Design

TABLE OF CONTENTS

Policy for Design, Installation, & Maintenance of FOG Removal Systems

I. PURPOSE:

The purpose of this policy is to aid in the selection, sizing, construction, and maintenance of any FOG Removal Systems (grease interceptors) for those establishments that have the potential to discharge wastewater containing fats, oil, and grease (FOG) in quantities that may or will cause obstruction to the flow of wastewater or interfere with the operation of the municipal sewer system in violation of Evansville Municipal Code 13.05.090.

Grease interceptors are installed on "gray" water drain lines and are designed to remove FOG from wastewater. FOG wastes must be regularly removed or pumped out of the interceptor. The maintenance frequency will vary for each establishment, but the grease interceptor must be cleaned whenever 25 percent of its collection chamber becomes filled with FOG or solids, or when visible grease is seen discharging through the outlet tee. The discharge of any waters or wastes directly or indirectly into the city collection system containing more than 200 milligrams per liter of fats, oils, greases, or waxes is prohibited by the Evansville Municipal Code 13.20.

Information contained within this document is based upon the Uniform Plumbing Code (UPC), International Plumbing Code (IPC), and standard industry practices. A grease interceptor shall be required for all commercial buildings with food service of any type. Size, type, and location of grease interceptors shall be in accordance with the requirements set forth herein and manufacturer's instructions. In the event of a conflict between this document and the plumbing codes, the most restrictive requirement shall take precedence.

II. DEFINITIONS:

FOG is material composed primarily of fats, oil, and grease from animal or vegetable sources. The terms fats, oil, and, grease shall be deemed as FOG by definition. FOG does not include petroleum based products.

Establishment is primarily engaged in activities of preparing, serving, or otherwise making food available for consumption. These facilities include restaurants, cafeterias, hotels, motels, hospitals, nursing homes, schools, grocery stores, convenience stores, prisons, jails, churches, camps, caterers, manufacturing plants, or any other sewer Users as determined by the EWSU who discharge applicable waste.

User means any person or persons and any establishment of any kind discharging or causing the discharge of wastewater into the sewer system of the City.

Gravity Grease Interceptor (GGI) is generally installed in the ground outside the establishment, upstream from the sanitary waste sewer line, and is at least 1,000 gallons in capacity.

Hydromechanical Grease Interceptor (HGI) (formerly referred to as *grease trap*) may contain weirs, diffusers, or moving mechanical components and is required to have a flow restrictor. Flow restrictors slow the flow of water entering the interceptor. Each fixture discharging to an HGI must have an approved type of vented flow restrictor. Alternatively, if approved, a single flow restrictor may be installed ahead of the HGI, as long as FOG producing plumbing fixtures and appliances discharge through it. At no time shall the total flow through any flow restrictor(s) going to an HGI be greater than the rated flow of the interceptor. Also, the total capacity of the fixtures discharging into an HGI, in gallons, shall not exceed two and one-half (2 ½) times the certified gallons-per-minute flow rate of the interceptor. Both types of interceptors must be trapped and vented in accordance with local and state codes.

Oil Water Separator is an approved and industry standard system that is specifically designed and manufactured to separate oil from water. The system shall allow the oil to be collected and removed on a regular basis as to prevent it from being discharged into the wastewater collection system. Only oil/water separators manufactured for that specific operation will be approved. Adequate support literature from the manufacturer will be required so as to allow a proper review by the EWSU.

Drainage Fixture Unit (DFU) is a unit of measure for the load-producing effects on a plumbing system from different kinds of plumbing fixtures.

III. APPLICABILITY:

These requirements are applicable to all commercial establishments, including those that are undergoing:

1. New Construction
2. Interior remodeling to accommodate expansion or operational modifications
3. Changes of ownership/occupancy
4. Establishments experiencing difficulty in achieving compliance with maintenance and/or wastewater discharge limitations
5. A change in menu or hours of operation that could significantly affect the amount of fats, oils, and grease discharged into the establishment's FOG removal system

IV. APPLICATIONS FOR INSTALLATION OF NEW GREASE INTERCEPTORS AND MODIFICATIONS TO EXISTING GREASE INTERCEPTOR SYSTEMS

Food Service Establishments meeting any of the above criteria shall be required to submit to EWSU a *FOG Discharge Questionnaire*. The data contained therein will be used to assess the size required to effectively control the discharge of undesirable materials into the wastewater collection system. The same process will occur where any existing establishments are found to be in violation of this policy. Existing establishments shall not be exempt from the requirements of this policy. "Grandfathering" of existing establishments that do not meet the FOG discharge requirements will not be permitted.

In addition to submitting a *FOG Discharge Questionnaire,* a user must submit plans to EWSU for approval to install a new grease interceptor or to make modifications to an existing FOG Removal System. The plans shall include the location of the grease interceptor, its capacity (in gpm or gallons), the connecting pipes, the capacities of the fixtures draining to the interceptor, and any other information deemed necessary.

Applications shall be sent to:

Evansville Water & Sewer Utility
FOG Coordinator
1500 Waterworks Road
Evansville, Indiana 47713
fog@ewsu.com

In submitting an application, the Food Service Establishment agrees to comply with all provisions of this *Policy for Design, Installation, & Maintenance of FOG Removal Systems*. The applicant further agrees to regularly clean and maintain their grease interceptor(s) in accordance with the guidelines recommended in this policy (see Maintenance & Cleaning Section), and to follow the guidelines recommended in the *Best Management Practices for Controlling Fats, Oils, & Grease* (Appendix B).

This policy provides for proper sizing and use of grease interceptors. EWSU reserves the right to consider alternatives to the standards found in this policy on a case by case basis. Additional equipment may be needed at certain locations to ensure proper conveyance of wastewater through the municipal sewer system.

EWSU may mandate existing establishments, where test samples repeatedly exceed the 200 mg/liter total recoverable FOG maximum limit to install additional FOG removal equipment, increase the size and/or number of grease interceptors, and establish a systematic maintenance program for their FOG removal system.

Exception Process:

Exceptions to this policy may be requested in writing to the Evansville Water & Sewer Utility to allow a waiver or modification of a requirement prior to approval and construction. Exception requests shall be sent to the FOG Coordinator at the above address.

The applicant shall submit a licensed professional engineer's report with the request for an exception.

The decision to grant an exception to this policy is at the sole discretion of the FOG Coordinator. An exception shall only be approved to the extent it is necessary. The approval of an exception shall not be construed to be an approval of any violation of this Policy or any of the other provisions of the Evansville Municipal Code.

V. SIZING & INSTALLATION REQUIREMENTS

Sizing methods described herein are intended for use in determining grease interceptor sizes that will provide the City's sanitary sewer system with protection against grease and other obstructing materials. Sizing determinations are based on operational data provided by business owners or their contractors. In approving an establishment's plumbing or grease interceptor design, the City does not accept liability for the failure of a system to adequately treat wastewater to achieve effluent quality requirements specified under Evansville Water & Sewer Utility (EWSU) regulations. It is the responsibility of the establishments and/or its contractors to ensure the appropriate level of treatment necessary for compliance with environmental and wastewater regulations.

The following conditions shall apply to sizing and selection of grease interceptors:

1. New Food Service Establishments shall have a minimum of one 1,000 gallon capacity exterior gravity grease interceptor. Gravity Grease Interceptors may range in size from 1,000 – 2,000 gallons of total liquid capacity per unit.

2. Existing Food Service Establishments that have spatial constraints preventing the installation of an exterior gravity grease interceptor may request an exception to install hydromechanical grease interceptors in lieu of gravity grease interceptors. Requests for exception must demonstrate to the satisfaction of the EWSU that the installation of an exterior gravity grease interceptor is unfeasible. The establishment seeking the exception shall submit a written request to the EWSU detailing the reasons and issues supporting the request as stated in the previous section IV of this Policy.

3. Gravity Grease Interceptor (GGI) size (total liquid capacity) shall be determined using the *2003 Uniform Plumbing Code (UPC Appendix "H")* sizing method, as outlined in the following Section A of this Policy. This sizing method is based upon the total liquid capacity determined by the establishment's seating capacity, number of meals served per peak hour, waste flow rate, retention time, and storage factor. The size and number of GGI's required will be based upon the calculated total liquid capacity (tank size).

4. Hydromechanical Grease Interceptor size (total flow rate) shall be determined using the 2012 Uniform Plumbing Code (Chapters 7 & 10) Drainage Fixture Units (DFU) sizing method, as outlined in the following Section B of this Policy. This sizing method is based upon the sewage discharge flow rate determined by the number of drainage fixture units flowing into the interceptor. The size and number of HGI's required will be based upon manufacturer's recommendations for the calculated discharge flow rate.

FOR SIZING & INSTALLATION INFORMATION, GO TO THE FOLLOWING SECTIONS "A" FOR GRAVITY GREASE INTERCEPTORS AND "B" FOR HYDROMECHANICAL GREASE INTERCEPTORS.

A. Gravity Grease Interceptors (GGI's):

The sizing method outlined below is based upon the *2003 Uniform Plumbing Code (UPC Appendix "H")*. Gravity grease interceptors are identified by volume, 30 minute retention time, baffle(s), a minimum of two compartments, and gravity separation. These interceptors are designed by a registered professional engineer. Gravity grease interceptors are generally installed outside.

It is the responsibility of the establishment and their contractors to ensure that the wastewater discharged from their facility is in compliance with the *Evansville Municipal Code* discharge limitations (chapters 13.05 & 13.20). For the purpose of plans review, a general assessment of grease interceptor design and size will be performed using the following formulas. (These formulas have been demonstrated as industry standards capable of achieving the EWSU discharge criteria when systems are maintained in proper condition.)

<u>Calculation Method</u>:

Total Liquid Capacity [Tank Size] (gallons)	=	No. of Meals per Peak Hour (meals/hr.) [1]	x	Waste Flow Rate (gal./meal) [2]	x	Retention Time (hours) [3]	x	Storage Factor [4]

<u>Factors</u>:

1. Number of Meals per Peak Hour:

No. of Meals per Peak Hour	=	Max. Seating Capacity	x	Peak Factor (see below)

Peak Factors:

a. Dinner Club (120 min.) 0.50
b. Leisure Dining (90 min.) 0.67
c. Restaurant (60 min.) 1.00
d. Fast Food Restaurant (45 min.) 1.33
e. Fast Food Restaurant with Drive-thru 2.00

2. Waste Flow Rate:
   a. With Dishwashing Machine ..... 6 gal./meal
   b. Without Dishwashing Machine ..... 5 gal./meal
   c. Single Service (food served on disposable service ware) ..... 2 gal./meal
   **Add to Waste Flow Rate if food waste disposer used ..... 1 gal./meal*

3. Retention Times:
   a. Commercial Kitchen Waste:
      Dishwasher, garbage disposal, or both ..... 2.5 hours
   b. Single Service Kitchen:
      Single serving ..... 1.5 hours

4. Storage Factors:
   a. Fully Equipped Commercial Kitchen..... 8 hr. operation: 1
      12 hr. operation: 1.5
      16 hr. operation: 2
      24 hr. operation: 3
   b. Single Service Kitchen (food served on disposable service ware)..... 1.5

5. Sample Calculation No. 1:

   Calculate the size of a grease interceptor for a fast food restaurant that is open 24 hours per day and has a seating capacity of 66. There is no dishwasher and food is served with disposable service ware.

   Assumptions:
   a. Maximum Seating Capacity = 66
   b. Peak Factor for Fast Food Restaurant = 1.33
   c. Waste Flow Rate for Single Service (Disposable service ware) = 2 gal./meal
   d. Retention Time for Single Service Kitchen/Single Serving = 1.5 hours
   e. Storage Factor for Singe Service Kitchen (Disposable service ware) = 1.5

   Total Liquid Capacity (Tank Size) =

   (66 x 1.33) meals/peak hr. x 2 gal./meal x 1.5 hours x 1.5 = 395 gallons

   Note: The minimum size of a gravity grease interceptor is 1,000 gallons. Therefore a 1,000 gallon grease interceptor must be installed in this case.

6. Sample Calculation No. 2:

   Calculate the size of a grease interceptor for a commercial kitchen of a restaurant serving a maximum of 76 meals/hr. The kitchen is equipped with a dishwasher and the kitchen operates 16 hrs./day.

   Assumptions:
   a. Number of Meals per Peak Hour = 76
   b. Waste Flow Rate Dishwashing Machine = 6 gal./meal
   c. Retention Time for Commercial Kitchen with Dishwasher = 2.5 hours
   d. Storage Factor for Fully Equipped Commercial Kitchen @ 16 hrs./day = 2

   Total Liquid Capacity (Tank Size) =

   76 meals/peak hr. x 6 gal./meal x 2.5 hours x 2 = 2,280 gallons

   Note: The maximum size of a grease interceptor is 2,000 gallons. Therefore two 1,200 gallon grease interceptors should be installed in series in this case.

Gravity Grease Interceptor (GGI) Sizing by DFU Method:

When seating capacity is not available, use Table 1 below to determine the size of Gravity Grease Interceptors based upon Drainage Fixture Units (DFU's). The DFU sizing method is fully explained in the Hydromechanical Grease Interceptors Section of this Policy (section B). Select the Gravity Grease Interceptor size in Table 1 below based upon the Total Drainage Fixture Unit Value (DFU's) determined from the tables in section B. Round up to the next available grease interceptor size (e.g. 45 DFU's would require a 1,250 gallon interceptor).

Table 1
Gravity Grease Interceptor Sizing (DFU Method)

Drainage Fixture Units [1] (DFU's)	Interceptor Capacity [2] (gallons)
35	1,000 [3]
90	1,250
172	1,500
216	2,000
307	2,500
342	3,000
428	4,000
576	5,000
720	7,500
2,112	10,000
2,640	15,000

(1) From Table 1014.3.6 of 2012 UPC
Maximum allowable DFU's plumbed to the kitchen drain lines that will be connected to the grease interceptor.
(2) Based upon 30-minute retention time.
(3) Minimum allowable GGI size = 1,000 gallons.

See Appendix C for Gravity Grease Interceptor Sizing Worksheet by *UPC Appendix "H"* sizing method
See Appendix E for Gravity Grease Interceptor Sizing Worksheet by DFU sizing method

Gravity Grease Interceptor (GGI) Installation:

All permitting, construction, and inspection activities must be completed in accordance with these standards. Additionally, the following specifications must be incorporated into grease interceptor design.

1. No exterior grease interceptor may be less than 1,000 gallons or more than 2,000 gallons in capacity. If sizing calculations indicate a larger capacity than 2,000 gallons, then multiple interceptors shall be installed, connected in series to achieve the required design volume.

2. Grease interceptor shall be constructed in accordance with *Gravity Grease Interceptor Detail* as shown in Appendix D or an approved equal designed by a licensed Professional Engineer. A "Traffic Rated" interceptor shall be installed under traffic bearing locations on the site (parking lots or roads). A "Non-Traffic Rated" interceptor may be installed under green space or non-traffic bearing areas of the subject to approval by EWSU.

3. Premanufactured polyethylene (or other polymer based materials) gravity grease interceptors are acceptable for use in lieu of concrete units. Polyethylene units shall be properly anchored to prevent floatation. Manufacturer's details for polyethylene interceptors and associated anchoring system plans, prepared by a licensed professional engineer, must be submitted to EWSU for approval prior to installation.

4. Gravity grease interceptors are to be installed at a minimum distance of 10 ft. from sinks and dishwashers to allow for adequate cooling of the wastewater. Water temperatures must be less than 120 degrees prior to entering gravity grease interceptor.

5. All grease bearing waste streams shall be routed through an appropriate grease interceptor. Equipment requiring a grease interceptor may include, but is not limited to: three-compartment sinks, pot/pan sinks, soup kettles, hand-washing sinks, pre-rinse sinks, dishwashers, mop sinks and floor drains. Notable Exceptions are: Drains that receive "clear waste" only, such as from ice machines or condensate from coils and drink stations. Such drains may be plumbed to the sanitary system without passing through the grease interceptor with the condition that the receiving drain is a "hub" type that is a minimum of two inches above the finished floor.

6. All exterior or recessed gravity grease interceptors are to be installed with an Effluent Sampling Well as shown on *Grease Interceptor Detail* drawing in Appendix D.

7. Food waste disposers (grinders) and dishwasher pre-rinse sinks shall discharge into the gravity grease interceptor. All food waste should be removed from dishware prior to washing dishes in dishwasher.

8. Dishwashers shall discharge into the gravity grease interceptor.

B. Hydromechanical Grease Interceptors (HGI's):

The sizing method outlined below is based upon the 2012 Uniform Plumbing Code (Chapters 7 & 10), using Drainage Fixture Units (DFU's). Hydromechanical grease interceptors may be substituted for gravity grease interceptors when an exterior gravity grease interceptor cannot be accommodated on the property of an existing establishment and when no food waste disposer discharges into the interceptor.

An exception must be approved by EWSU prior to installing a hydromechanical interceptor.

The Drainage Fixture Unit (DFU) sizing method shown below shall be used to determine the anticipated discharge flow rate based upon the total number of DFU's.

EWSU will evaluate the sizing of the proposed unit(s) based upon information contained in the *FOG Discharge Questionnaire,* proposed design plans, and the HGI manufacturer's product information submitted by the establishment. EWSU reserves the right to increase proposed interceptor sizes based upon industry accepted plumbing guidelines and past experience.

New (or replacement) HGI's must be approved by EWSU prior to installation.

DFU Sizing Method:

First, evaluate which fixtures in the establishment have the potential to discharge FOG-bearing waste. Typically, these fixtures will include three-compartment sinks, dishwasher pre-rinse sinks, floor drains in cooking and food preparation areas, mop sinks, trench drains for soup kettles and braziers, and sinks that serve wok stations and similar fixtures and appliances. Fixtures that have the potential to discharge FOG-bearing waste must be fitted to a grease interceptor.

Once the FOG bearing fixtures have been identified, determine how many DFU's each fixture should be assigned. Please refer to Tables 2 and 3 below to determine the DFU's for the most common kitchen fixtures. If the DFU's cannot be determined because a kitchen plan is not available, the size of an interceptor shall be determined based upon the maximum DFU's allowed for the pipe size connected to the inlet of the interceptor (see Table 4).

Select the discharge flow rate from Table 5 corresponding with the total number of DFU's calculated. Use manufacturer's product information to select the proper size and model of an HGI unit, based upon the calculated discharge flow rate. Hydromechanical interceptor grease retention capacity may be determined from Table 6 and may be no less than 50 lbs.

See Appendix E in this Policy for Grease Interceptor Sizing Worksheet (DFU Method)

Table 2 Drainage Fixture Unit Values (DFU's)		
Type of Fixture	**# of DFU's**	**Comments**
Commercial Sink w/ Food Waste	3 per compartment	
Food Preparation Sink	2 per compartment	
Wok Sink	3	
Bar Sink	2	
Handwash Sink	2	
Service or Mop sink	3	When cooking meat, new mop sinks must be connected to grease protection
Food Waste Disposer (Grinder) and/or Dishwasher Pre-Rinse Sink	3	Requires a Food Waste Solids Interceptor
Commercial Dishwasher	DFU's based upon drain size (table 3)	Requires a Pre-Rinse Sink with Solids Interceptor. Dishwasher may bypass HGI when approved
Floor Drain	DFU's based upon drain size (table 3)	Floor sinks that receive only ice machine and cooler condensate are not counted
Trench drains	2 DFU's per lineal foot of drain	

For fixtures not listed above, refer to Table 702.1 of the 2012 UPC.

Table 3 below may be used to determine the number of DFU's for fixtures based upon trap & trap arm size when a specific fixture is unknown or not listed in Table 2.

Table 3 Maximum Drainage Fixture Units for Trap & Trap Arm	
Drain Size (in)	**DFU's [(1)]**
1-1/4	1
1-1/2	3
2	4
3	6
4	8

[(1)] Drainage Fixture Unit equivalents taken from Table 702.2(a) of the 2012 UPC

Table 4 below may be used to determine the number of DFU's when a fixture count is not available, based upon pipe size for the drain pipe that is common to all plumbing fixtures discharging into the grease interceptor. For example, a 3" drain pipe size would equal a design DFU count of 35. Using Table 5, a DFU count of 35 will require a hydromechanical interceptor certified for a flow rate of 75 gpm.

Table 4 **Drain Pipe Size, GPM, Maximum DFU Count**		
Pipe Size (in)	**Max. Full Pipe Flow (gpm)**	**Max. DFU Count**
2	20	8
2-1/2	38	14
3	60	35
4	125	216
5	230	428
6	375	720

Use Table 5 to determine hydromechanical grease interceptor minimum size flow rate (gpm) based upon the total number of DFU's calculated. Refer to HGI manufacturer's information to select model for specified flow rate.

Table 5 **Hydromechanical Grease Interceptor (HGI)** **Sizing Chart**		
Approx. Influent Pipe Size (in)	**DFU's (1)**	**Grease Interceptor Minimum Flow Rate (gpm) (2)**
2	8	20
	10	25
2-1/2	13	35
	20	50
3	35	75
	172	100
4	216	150
	342	200
5	428	250
	576	350
6	720	500

Information in above tables is derived from section 702.0, and tables 703.2 and 1014.2.1 of the 2012 Uniform Plumbing Code.

(1) The maximum allowable number of DFU's that can be connected to the grease interceptor.

(2) For one-minute drainage period (2012 UPC Table 1014.2.1)

Use Table 6 to determine the minimum grease retention capacity (lbs) required for the hydromechanical interceptor based upon the minimum flow rate (gpm) from Table 5. Both flow-thru rating and grease retention capacity should be considered in selecting the interceptor size and model. It is recommended that the grease interceptor(s) be sized for sufficient capacity to hold a minimum of one month of grease between pump-outs based upon anticipated grease production rates for the establishment.

Table 6
HGI Grease Retention Capacity by Flow-Thru Rating

Total Flow-Thru Rating (gpm)	Grease Retention Capacity (lbs)
25	50 (1)
35	70
50	100
75	150
100	200
150	300
200	400
250	500
350	700
500	1000

From Table 1003.3.4.1 of 2006 IPC
(1) Minimum allowable grease capacity = 50 lbs.

Example:

A neighborhood café will serve a wide variety of foods on plates:

The café has a 3-compartment sink (9 DFU's), a 2-compartment food prep sink (4 DFU's), a mop sink (3 DFU's), a handwash sink (2 DFU's), a food waste disposer with pre-rinse sink (3 DFU's), and a dishwasher. The dishwasher may bypass the HGI, but the dishwasher pre-rinse sink and food waste disposer must be connected to a solids interceptor and grease interceptor. This establishment has 9+4+3+2+3 = 21 DFU's. Table 5 shows the next larger DFU category = 35, requiring the café to install a 75 gpm rated HGI.

Hydromechanical Grease Interceptor (HGI) Installation:

1. Hydromechanical grease interceptor systems shall not be installed in new establishments and may only be used in existing establishments where space restrictions prevent the installation of a gravity grease interceptor.

2. Hydromechanical grease interceptors are typically installed indoors and connected to one to four sinks in a kitchen. Multiple HGI's shall be connected in parallel, utilizing a flow splitter designed to distribute flow uniformly between interceptors.

3. Hydromechanical grease interceptors are made of steel, fiberglass or polyethylene, typically consisting of a single compartment. Grease interceptors must be watertight, constructed of materials not subject to excessive corrosion or decay, and must be accessible for inspection and cleaning. See Appendix F for detail of a typical hydromechanical grease interceptor installation.

4. Hydromechanical grease interceptors are sized based on influent flow rate (gpm) and pounds of grease storage capacity. Use the Drainage Fixture Unit (DFU) method outlined above to determine minimum flow rate and grease storage capacity. Follow manufacturer's recommendations for selecting the proper HGI size to meet minimum design requirements.

5. Hydromechanical interceptors must be equipped with an influent flow regulator device to limit the rate of inflow to its certified flow rate. The HGI must also have an effluent valve assembly that allows for sample collection.

6. Hydromechanical grease interceptors must be cleaned frequently. Cleaning is recommended to be performed no less than once per month in order to keep the interceptor functioning at optimal capacity. Floating FOG and settled solids accumulation should not exceed 25% of the interceptor's overall capacity.

7. Food waste disposers (grinders) and dishwasher pre-rinse sinks shall drain directly into a food waste solids interceptor prior to discharging into the grease interceptor. The solids interceptor must be cleaned regularly and its contents emptied into the garbage or compost. Use of a solids interceptor improves grease interceptor performance and may help decrease pump-out frequency. Hydromechanical grease interceptors cannot process food waste. All food waste should be removed from dishware prior to washing dishes in dishwasher.

8. Discharge from dishwashers that have a pre-rinse sink may be permitted to bypass a hydromechanical grease interceptor and drain directly into the sanitary sewer system with EWSU approval. Establishments installing a dishwasher must also install a pre-rinse sink and associated solids interceptor when a hydromechanical grease interceptor is to be utilized. Existing establishments that have the pre-rinse sink plumbed jointly with the dishwasher are permitted to discharge the dishwasher into the hydromechanical grease interceptor provided that the interceptor is certified for a minimum flow-thru rating of 75 gpm.

9. Hydromechanical grease interceptor and plumbing systems plans submitted for approval must be designed and stamped by a qualified professional engineer.

10. Additives that emulsify or impede separation of oils and grease shall not be permitted.

C. Oil Water Separators

Oil Water Separators (OWS) are "in-line" devices used to separate oils and sediment from a variety of wastewater discharges. OWSs receive only wastewater generated during processes such as vehicle washing, maintenance or production where the potential for oil runoff exists, and then, only in those maintenance or production areas where drainage exists that would allow the potential for the introduction of oil-bearing wastewater into the collection system.

Applicability

OWSs are required at repair garages, car-washing facilities, at factories where oily and flammable liquid wastes are produced and in hydraulic elevator pits.

OWSs shall be installed in-line with any waste stream originating from the aforementioned locations or processes and shall collect and hold that waste before it is emptied into the building drainage system or any other point of disposal.

If an OWS is used to comply with secondary requirements for bulk storage containers, it must be sized to contain the largest single bulk storage container with sufficient freeboard to contain precipitation.

Parking garages in which servicing, repairing or washing is not conducted, and in which gasoline is not dispensed, shall not require a separator. Areas of commercial garages utilized only for storage of automobiles are not required to be drained through an OWS.

All OWSs must be properly designed, sized and maintained in accordance with the language contained within this policy.

General Design and Sizing Requirements

OWSs shall have a depth of not less than 2 feet (610 mm) below the invert of the discharge drain. The outlet opening of the separator shall have not less than an 18-inch (457 mm) water seal. Where automobiles are serviced, greased, repaired or washed or where gasoline is dispensed, OWSs shall have a capacity of not less than 6 cubic feet (0.168 m^3) for the first 100 square feet (9.3 m^2) of area to be drained, plus 1 cubic foot (0.28 m^3) for each additional 100 square feet (9.3 m^2) of area to be drained into the separator.

In approving an establishment's OWS design, the City does not accept liability for the failure of a system to adequately treat wastewater to achieve effluent quality requirements specified under EWSU regulations. It is the responsibility of the establishment and/or its contractors to ensure the appropriate level of treatment necessary for compliance with environmental and wastewater regulations.

Maintenance Requirements

Each OWS shall be cleaned by the User once a year or as required to maintain the integrity of the system, or as required by EWSU. Records of this and other maintenance activities performed on the OWS shall be kept on-site where they shall be made available to EWSU upon written or verbal request.

VI. MAINTENANCE & CLEANING:

Establishments shall maintain their FOG removal systems so that discharge from these facilities is in compliance with all applicable laws, rules, and regulations. Cleaning and maintenance of the outside gravity grease interceptor, inside hydromechanical grease interceptors or oil/water separators shall be the responsibility of the establishment. It shall be the responsibility of the establishment to inspect any of the aforementioned devices during the pumping or maintenance procedure to ensure that the cleaning is done properly and that all fittings and fixtures inside the interceptor, trap, or separator are in working condition and functioning properly. The establishment shall be responsible for the cost and scheduling of all repairs to its grease interceptors and/or oil/water separators. Repairs required by the FOG Coordinator for Evansville Water and Sewer shall be completed within 30 days after the date that the written notice is received by the establishment, unless EWSU approves a different completion date in writing.

1. The establishment is required to keep an up-to-date *Grease Interceptor Maintenance Log* (see Appendix G) showing the following:

    - Date maintenance or cleaning was performed
    - Name of company that performed the cleaning
    - Manifest Number provided by grease hauler
    - How much waste was removed at the time of cleaning
    - Where that waste was disposed

    The *Grease Interceptor Maintenance Log* shall be kept in a conspicuous location on the premises of the establishment for inspection. Trip tickets or manifests shall be maintained for a period of 3 years to substantiate the maintenance log.

    Removal of a grease interceptor's contents shall be recorded on a manifest that identifies the date and time of pumping, IDEM vehicle number, name of hauler and their employee performing the work, manifest number, quantity of grease and solids removed (in gallons), waste disposal site, and whether the interceptor is an interior or exterior unit. The hauler shall provide the establishment, at the time of service, a manifest conforming to all Federal and State statutes and regulations, and the provisions of this policy.

    A copy of the information required in the maintenance log, including trip tickets or manifest, must be submitted to the EWSU office when requested. The report shall be submitted to the EWSU office within 14 calendar days of EWSU's request for information.

2. It is recommended that an owner, manager or employee of the establishment supervise grease interceptor cleaning, be physically present, and observe the entire cleaning operation.

3. Cleaning shall include the complete removal of all contents, including floating materials, wastewater, and bottom sludge and solids. After complete evacuation, walls, top, and bottom of the interceptor shall be thoroughly scraped and the residue removed. Upon completion of the servicing, the employee witnessing the cleaning shall make an inspection of the interior of the interceptor and sign the trip ticket or manifest. The employee shall make an appropriate entry in the establishment log.

4. Interceptors shall be pumped out completely during each cleaning event. The return of gray water back into the grease interceptor from which the wastes were removed (pump & return/backflush) is prohibited.

5. Outdoor gravity grease interceptors shall be cleaned no less than once every three (3) months or when FOG contents exceed 25% of the total capacity of the interceptor. Cleaning events shall be increased as needed to prevent carryover of grease into the collection system.

6. Hydromechanical grease interceptors shall be cleaned no less than once every month or when the FOG contents exceed 25% of the total capacity of the interceptor. HGI's should be cleaned according to manufacturer's recommendations or more often as necessary to prevent pass-through of grease into the collection system.

7. Oil/water separators shall be cleaned out completely a minimum frequency of once every 6 months or more frequently as needed to prevent carryover of petroleum based products into the collection system.

8. Requests for decreased cleaning frequency must be accompanied by effluent test sample results from a certified laboratory showing that total recoverable FOG concentrations are consistently well below the 200 mg/liter maximum limit. A minimum of three test samples must be taken at one month intervals for the three month period immediately prior to submission of the request. Such requests must be submitted to the EWSU FOG Coordinator.

9. Wastes removed from each grease interceptor, grease trap or oil/water separator shall be disposed of at a facility permitted to receive such waste in accordance with federal, state, and local regulations. Disposing of FOG wastes in any private or public portion of the collection system is strictly prohibited.

10. It shall be a violation for an establishment to allow grease interceptor waste to be removed from the premises by a transporter that does not have applicable federal, state, or local permits or registrations. Transportation and disposal of grease or other materials generated by a grease interceptor shall be subject to all applicable federal, state and local regulations.

11. No additives may be used in a grease interceptor, grease trap or oil/water separator; such as concentrated detergents, emulsifiers, de-emulsifiers, surface active agents, enzyme, degreasers, solvents or any type of product that will liquefy grease interceptor wastes.

12. All costs associated with proper maintenance of the grease interceptor, grease trap, or oil/water separator shall be borne by the establishment.

13. All establishments shall use waste barrels or containers to dispose of waste fats, oils and grease. Such material shall be recycled or disposed of through an establishment permitted and authorized to receive such waste in accordance with all applicable federal, state, and local regulations.

14. Establishments not in compliance with the cleaning requirements of the FOG Policy shall clean the grease interceptor within fourteen (14) calendar days after the establishment receives written notice from EWSU.

15. An establishment must contact EWSU for instructions on proper closing methods of its grease removal system prior to abandoning a facility or selling its properties for a different use.

VII. MONITORING, INSPECTION & RIGHT-OF-ENTRY:

EWSU staff shall have the right to enter the premise of any establishment to determine whether it is complying with all requirements of the FOG policy. The establishment shall allow EWSU staff ready access to all parts of the premises for the purposes of inspection, sampling, records examination and copying, and the performance of any additional duties during reasonable business hours.

1. An Evansville Water & Sewer FOG Inspector will periodically conduct random inspections. During inspections the inspector will review the *Grease Interceptor Maintenance Log* and request a copy of the permitted grease hauler's manifest to verify the interceptor has been pumped out. He will also conduct an inspection of the kitchen and measure the accumulation of grease and solids in the grease interceptor.

2. EWSU may increase the pump out frequency if the interceptor is undersized or needs more maintenance. Notice of Violations will be issued for not having a grease interceptor, failing to regularly service the grease interceptor at least every 90 days, not having an up to date *Grease Interceptor Maintenance Log,* not having a copy of the grease hauler's manifests, or using a non-permitted grease hauler.

3. Where an establishment has security measures in force which require proper identification and clearance before entry into the premise, the management of said establishment shall make necessary arrangements with security so that upon presenting proper identification, EWSU staff will be permitted to enter immediately for the purposes of performing specific responsibilities.

4. EWSU shall have the right to conduct sampling and/or monitoring of the establishment's operations.

5. EWSU may require the establishment to install monitoring equipment as necessary. The establishment's sampling and monitoring equipment shall be maintained at all times in a safe and proper operating condition at the establishment's expense. Where applicable, devices used to measure wastewater flow and quality shall be calibrated at least annually to ensure accuracy.

6. Any temporary or permanent obstruction of safe and easy access to the establishment's FOG removal system, for inspection and/or sampling shall be promptly removed at the written or verbal request of EWSU staff and shall not be replaced. The costs of clearing obstructions for said access shall be borne by the establishment.

7. Unreasonable delays in allowing EWSU staff to access the establishment's facilities shall be a violation of this policy.

New establishments shall not be allowed to initiate operations until a properly sized FOG removal system is approved, installed, and inspected by EWSU. EWSU may suspend water service if FOG removal system is not in compliance with this FOG policy.

VIII. VIOLATION OF ORDINANCE:

1. No establishment shall discharge wastewater to the sanitary sewer system in violation of this FOG Policy or EWSU's discharge limitations.

2. It shall be a violation of the FOG Policy for any establishment to:

    a. Modify a grease interceptor structure without the consent or approval of EWSU, including alteration or removal of any flow restricting devices or diffusers, so as to cause flow to exceed the design flow capacity of the grease interceptor.

    b. Provide false maintenance records.

    c. Cause or permit the obstruction of or interference with a grease interceptor, or permits others to cause such interference.

    d. Not comply with the provisions of this FOG policy.

3. No establishment, shall discharge FOG to the sanitary sewer system in excess of 200 mg/liter total recoverable FOG, contribute to increased downstream maintenance of the sanitary system due to a FOG discharge, or contribute to downstream backups or overflows due to FOG discharge. If such discharge occurs, the User shall be considered in violation of this policy and subject to the remedies prescribed herein. EWSU may mandate existing establishments, where test samples repeatedly exceed the 200 mg/liter total recoverable FOG maximum limit to install additional FOG removal equipment, increase the size and/or number of grease interceptors, and establish a systematic maintenance program for their FOG removal system.

4. No establishment shall contribute or cause to be contributed into the grease interceptor or the sanitary sewer system any of the following:

    a. Hot water running continuously through grease interceptor;

    b. Concentrated alkaline or acidic solutions;

    c. Concentrated detergents, emulsifiers, de-emulsifiers, surface active agents, enzyme, degreasers, solvents or any type of product that will liquefy grease interceptor wastes;

    d. Any substance that may cause excessive foaming in the sanitary sewer system;

    e. Any substance capable of passing the solid or semi-solid contents of the grease interceptor to the sanitary sewer system;

    f. Hazardous wastes including concentrated cleaners, pesticides, herbicides, paints, solvents, gasoline or other petroleum products; or

    g. Waste fats, oils and grease not generated as part of the wastewater system.

5. When EWSU finds that an establishment is in violation of any provision contained within this policy or any other relevant pretreatment standard or requirement, EWSU will then serve the establishment a Written Notice of Violation (NOV). The NOV will include:

a. The nature of the violation found
b. The required action needed to correct the violation
c. The time period in which the User has to correct the identified violation

Nothing in this section shall limit EWSU from adhering to the Utility Board-approved *Corrective Action Plan and Fine Structure* (See Appendix H), including emergency actions or any other enforcement action, without first issuing a Notice of Violation.

When all steps identified in the aforementioned *Corrective Action Plan and Fine Structure* have been exhausted and the establishment is still found to be in violation, EWSU may initiate a *Show Cause* hearing in which an *Administrative Compliance Order* will be prepared. Establishment's that have been issued an *Administrative Compliance Order* must submit a *Corrective Action Plan* to the FOG Coordinator within the time stipulated in the *Administrative Compliance Order*. Said *Corrective Action Plan* shall provide the following information:

a. A written statement Identifying the cause(s) of the violation(s)
b. List of any and all installed equipment intended to remediate the initial Violation as well as a detailed maintenance plan including best management practices that the establishment will implement to manage that equipment
c. Any other protective measure(s) that were specifically designed or implemented for the express purpose of preventing future violations.

When required, sampling data shall be submitted at least twice per week for one month, demonstrating that concentration limits of oil and grease are below the 200 mg/L limitation identified in 13.20.020. Sampling shall be performed at the establishment's expense.

If the violation involves a discharge that is prohibited, or exceeds concentration limitations, the report shall contain information regarding the time, date, location, cause, source, quantity, quality and concentration of the discharge and the corrective measures either already taken or that are planned to be taken by the establishment to correct and prevent any similar recurring discharges.

Submission of this plan in no way relieves the establishment of liability for any violations occurring before or after receipt of the *Notice of Violation*.

Should the recipient of an *Administrative Compliance Order* fail to respond in writing to the FOG Coordinator within the specified response period, the establishment shall be considered in violation of the Evansville Municipal Code. Each subsequent day of noncompliance shall result in a separate violation. Any such failure to respond shall constitute a further violation of the *Sewer Use Ordinance* and may lead to civil or criminal penalties or other such appropriate enforcement responses including the immediate termination of water services.

IX. ENFORCEMENT SYSTEM:

Establishments found to be in violation of any FOG Policy requirements will receive notice of such instances (see Appendix H). Notification and appropriate action may be in the form of the following types based upon this *Policy for Design, Installation, and Maintenance of FOG Removal Systems* document the EWSU has developed:

1. Consent Orders: The EWSU is hereby empowered to enter into consent orders, assurances of voluntary compliance, or other similar documents establishing agreement with the establishment responsible for the noncompliance. Such orders can be verbal or written and will include specific actions to be taken by the establishment to correct the noncompliance within a time period also specified by the order.

2. Notification of Violation: Whenever EWSU finds that an establishment continues to violate this policy, the EWSU as the control authority may serve upon said establishment a notice of the violation.

3. Show Cause: EWSU may order any establishment which causes or contributes to a violation of this policy or order issued hereunder to *Show Cause* why a proposed order and/or enforcement action should not be taken.

4. Fines: An establishment that is found to have violated any provision of this policy, or orders issued hereunder, may be fined an amount not to exceed $2,500 per violation. Each day on which noncompliance occurs or continues to occur shall be deemed a separate and distinct violation. Unpaid charges, fines, and penalties may continue to be a lien against the establishment's property or assets. Establishments desiring to dispute such charges, fines, and penalties must file a request for the EWSU to reconsider the fine within 14 calendar days of being notified of the fine. When the EWSU believes a request has merit, it shall convene a *Show Cause* meeting on the matter within two weeks of receiving the request from the establishment.

5. Administrative Compliance Orders: When EWSU finds that an establishment has violated or continues to violate this policy or order issued hereunder, it may present its findings to the EWSU Board requesting they issue an administrative order to the establishment responsible for the discharge, directing that, following a specified time period, water service may be disconnected unless adequate treatment facilities, devices, or other related appurtenances have been installed and are properly operated. Orders may also contain such other requirements as might be reasonably necessary and appropriate to address the noncompliance, including the installment of an improved/higher capacity FOG removal system, additional monitoring, and best management practices.

6. Emergency Suspensions: EWSU may suspend the establishment's water service whenever necessary in order to stop an actual or threatened discharge presenting or causing an imminent or substantial endangerment to the health or welfare of persons, the POTW, or the environment. Water service to the establishment will only recommence at the establishment's expense, after the ability to comply has been satisfactorily demonstrated.

7. Judicial Remedies: If an establishment violates any of the provisions of this Policy, the EWSU through legal counsel may commence an action for appropriate legal and/or equitable relief.

8. Injunctive Relief: When an establishment has violated or continues to violate the provisions of this Policy or order issued hereunder, the EWSU through counsel may petition the court for the issuance of a preliminary or permanent injunction or both (as may be appropriate) which restrains or compels the activities on the part of the establishment. EWSU shall have such remedies to collect these fees as it has to collect other sewer service charges.

9. Civil Penalties:

    a. Any establishment who has violated or continues to violate this chapter, or any order or permit issued hereunder, shall be liable to the EWSU who has legal authority to seek or assess civil penalties in the amount of $2,500 a day for each violation, plus actual damages incurred by the POTW. The penalties shall be assessed per violation per day for as long as the violation continues. In addition to the above-described penalties and damages, the EWSU may recover reasonable attorneys' fees, court costs, and other expenses associated with the enforcement activities, including, but not limited to, sampling and monitoring expenses, as allowed by law.

    b. The EWSU shall petition the court to impose, assess and recover such sums. In determining the amount of liability, the court shall take into account all relevant circumstances, including, but not limited to, the extent of harm caused by the violation, the magnitude and duration, any economic benefit gained by the violation, corrective actions taken by the establishment, the compliance history of the establishment, and any other factors as justice requires.

10. Criminal Prosecution: An establishment who knowingly makes any false statements, representations, or certifications in any application, record, report, plan, or other document filed or required to be maintained pursuant to this policy, or who falsifies, tampers with, or knowingly renders inaccurate any monitoring device or method required under Title 13 of the Evansville Municipal Code shall be referred to the Vanderburgh County Prosecutor for possible criminal prosecution.

X. PENALTY

Any establishment that is found to have violated an order of the EWSU or that has failed to comply with any provision of this policy, and the regulations or rules of the EWSU, or orders of any court of competent jurisdiction, shall be subject to the penalties set forth in Evansville Municipal Code 1.05.180. [1982 Code § 53.999; 1983 Code § 5.53.999.]

APPENDICES

1500 Waterworks Road
Evansville, IN 47713
Phone: 812-436-7013
Fax: 812-428-6941
Email: fog@ewsu.com

FOG Discharge Questionnaire

Fats, Oil, and Grease (FOG) Program

Billing Information:

_____
Name: (Company, Owner, Property Manager, etc.)

_____
Address

_____
City, State, Zip Code

_____ _____
Phone *Fax*

Site Information:

_____
Name: (Company, Owner, Property Manager, etc)

_____
Address

_____
City, State, Zip Code

_____ _____
Phone *Fax*

In an effort to reduce and/or eliminate costly sanitary sewer overflows as well as potential dangers of flammable liquids in our sewer systems, Evansville Water & Sewer Utility is requesting that this form be completed and returned to us **within 10 days of receipt**. Fax or mail the completed form to the address above attention Matt McBride or email to mmcbride@ewsu.com. ***Thank you for your cooperation.***

► Which best describes your establishment?: □ Commercial □ Commercial Multi-Tenant □ Industrial □ Governmental □ Medical □ Agricultural □ Private Home □ Townhome □ Condominium □ Apartment Other: _____

► What is your specific type of use? (car wash, restaurant, house, retail, office, etc.) _____

► If non-residential, what are your hours of operation? _____

Check & circle all that apply to this site: *Complete to the best of your knowledge:*

1) □ **Grease Trap or Interceptor** (butcher shop, convenience store, banquet facility, restaurant, deli, grocery store, etc.) ..... □ Y □ N

If yes to item 1:

a) What discharges into your grease trap? □ Dishwasher □ 3 Compartment Sink □ Floor Drains □ Other _____

b) Is the grease trap located indoors or outdoors? □ Indoors --- □ on the floor --- □ in the floor □ Outdoors

c) Seating capacity □ None Quantity: _____

d) Do you have a grease bin outdoors that you dump your solids into? ..... □ Y □ N

Please complete the specific information below for each item listed above or add an un-listed item. Use additional sheets if necessary

Item	Approximate Size	Exact Location	Service / Cleaning Frequency
1			
2			
3			
other			

To the best of my knowledge, the information provided in this questionnaire is accurate and complete:

_____ _____ _____
Signature *Print name* *Phone Number*

_____ _____
Date *Email Address*

1500 Waterworks Road
Evansville, IN 47713
Phone: 812-436-7013
Fax: 812-428-6941
Email: fog@ewsu.com

Best Management Practices for Controlling Fats, Oils, and Grease

Dry Clean-Up

Practice dry cleanup. Remove food waste with "dry" methods such as scraping, wiping, or sweeping before using "wet" methods that use water. Wet methods typically wash the water and waste materials into the drains where it eventually collects on the interior walls of the drainage pipes. Do not pour grease, fats or oils from cooking down the drain and do not use the sinks to dispose of food scraps. Likewise it is important to educate kitchen staff not to remove drain screens as this may allow paper or plastic cups, straws, and other utensils to enter the plumbing system during clean up. The success of dry cleanup is dependent upon the behavior of the employee and availability of the tools for removal of food waste before washing. To practice dry clean up:

- Use rubber scrapers to remove fats, oils and grease from cookware, utensils, chafing dishes, and serving ware.
- Use food grade paper to soak up oil and grease under fryer baskets.
- Use paper towels to wipe down work areas. Cloth towels will accumulate grease that will eventually end up in your drains from towel washing/rinsing.

Spill Prevention

Preventing spills reduces the amounts of waste on food preparation and serving areas that will require clean up. A dry workplace is safer for employees in avoiding slip, trips, and falls. For spill prevention:

- Empty containers before they are full to avoid spills.
- Use a cover to transport interceptor contents to rendering barrel.
- Provide employees with the proper tools (ladles, ample containers, etc.) to transport materials without spilling.

Maintenance

Maintenance is important to avoiding FOG blockages. For whatever method or technology is used to collect, filter and store FOG, ensure that equipment is regularly maintained. All staff should be aware of and trained to perform correct cleaning procedures, particularly for under-sink interceptors that are prone to break down due to improper maintenance. A daily and weekly maintenance schedule is highly recommended.

- Contract with a management company to professionally clean large hood filters. Small hoods can be hand-cleaned with spray detergents and wiped down with cloths for cleaning. Hood filters can be effectively cleaned by routinely spraying with hot water with little or no detergents over the mop sink that should be connected to a grease trap. After hot water rinse (separately trapped), filter panels can go into the dishwasher. For hoods to operate properly in the removal of grease-laden vapors, the ventilation system will also need to be balanced with sufficient make-up air.
- Skim/filter fryer grease daily and change oil when necessary. Use a test kit provided by your grocery distributor rather than simply a "guess" to determine when to change oil. This extends the life of both the fryer and the oil. Build-up of carbon deposits on the bottom of the fryer act as an insulator that forces the fryer to heat longer, thus causing the oil to break down sooner.
- Collect fryer oil in an oil rendering tank for disposal or transport it to a bulk oil rendering tank instead of discharging it into a grease interceptor or waste drain.
- Cleaning intervals depend upon the type of food establishment involved. Some establishments require monthly or once every two months cleaning. Establishments that operate a large number of fryers or handle a large amount of fried foods such as chicken may need at least monthly cleanings.

Full-cleaning of grease traps (removing all liquids and solids and scraping the walls) is a worthwhile investment. Remember, sugars, starches and other organics accumulate from the bottom up. If sediment is allowed to accumulate in the trap, it will need to be pumped more frequently.

- Develop a rotation system if multiple fryers are in use.
- Designate a single fryer for products that are particularly high in deposits, and change that one more often.

Oil & Grease Collection/Recycling & Food Donations

FOG's are commodities that if handled properly can be treated as a valuable resource.

- Begin thinking of oil and grease as a valuable commodity. Some rendering companies will offer services free-of-charge and others will give a rebate on the materials collected.
- Use 25-gallon rendering barrels with covers for onsite collection of oil and grease other than from fryers. Educate kitchen staff on the importance of keeping outside barrels covered at all times. During storms, uncovered or partially covered barrels allow storm water to enter the barrel resulting in oil running onto the ground and possibly into storm drains, and can "contaminate" an otherwise useful by-product.
- Use a 3-compartment sink for ware washing. Begin with a hot pre-wash, then a scouring sink with detergent, then a rinse sink.
- Make sure all drain screens are installed.
- Prior to washing and rinsing use a hot water ONLY (no detergent) pre-rinse that is separately trapped to remove non-emulsified oils and greases from ware washing. Wash and rinse steps should also be trapped.
- Empty grill top scrap baskets or scrap boxes and hoods into the rendering barrel.
- Easy does it! Instruct staff to be conservative about their use of fats, oils and grease in food preparation and serving.
- Ensure that edible food is not flushed down your drains. Edible food waste may be donated to a local food bank. Inedible food waste can be collected by a local garbage feeder that will use food discards for feeding livestock. Food donation is a win-win situation. It helps restaurants reduce disposal costs and it puts the food in the hands of those who can use it.

Grease Traps

- For grease traps to be effective, the units must be properly sized, constructed, and installed in a location to provide an adequate retention time for settling and accumulation of the FOG. If the units are too close to the FOG discharge and do not have enough volume to allow amassing of the FOG, the emulsified oils will pass through the unit without being captured. For information on properly locating, constructing, and sizing grease traps, contact your local FOG Coordinator**, Matt McBride,** at **812-436-7013** or by email at fog@ewsu.com. You can also examine EPA guidance documents at http://water.epa.gov/polwaste/wastewater/index.cfm.
- Ensure all grease-bearing drains discharge to the grease trap. These include mop sinks, woks, wash sinks, prep sinks, utility sinks, pulpers, dishwashers, pre-rinse sinks, can washes, and floor drains in food preparation areas such as those near a fryer or tilt/steam kettle. No toilet wastes should be plumbed to the grease trap.
- If these suggested best management practices do not adequately reduce FOG levels, the operator may consider installing a second grease trap with flow-through venting. This system should help reduce grease effluent substantially.

Gravity Grease Interceptor Sizing Worksheet

2003 Uniform Plumbing Code Appendix "H"

Company		**Calculated By**		**Date**	
Project		**Location**			

Follow these six simple steps to determine grease interceptor size:

	No of Meals Per Peak Hour		Waste Flow Rate		Retention Time		Storage Factor		Calculated Interceptor Size	Grease Interceptor
Enter Calculations > Here		X		X		X		=		
	Step 1		Step 2		Step 3		Step 4		Step 5	Step 6

1

Number of Meals Per Peak Hour (Recommended Formula):

Seating Capacity		Peak Factor		Meals per Peak Hour
	X		=	

Establishment Type:	**Peak Factor**
Fast Food with Drive-Thru	2.00
Fast Food (45 min)	1.33
Restaurant (60 min)	1.00
Leisure Dining (90 min)	0.67
Dinner Club (120 min)	0.50

Notes:

2

Waste Flow Rate:

Condition	**Flow Rate**
With a Dishwashing Machine	6 gal./meal
Without a Dishwashing Machine	5 gal./meal
Single Service Kitchen	2 gal./meal
**Add to Waste Flow Rate if Food Disposer used*	*1 gal./meal*

Notes:

3

Retention Time:

Commercial Kitchen Waste:	
Dishwasher	2.5 Hours
Single Service Kitchen:	
Single Serving	1.5 Hours

Notes:

4

Storage Factor:

Kitchen Type	**Storage Factor**
Fully Equipped Commercial	
Hours of Operation:	
8 Hours	1.00
12 Hours	1.50
16 Hours	2.00
24 Hours	3.00
Single Service Kitchen *(uses disposable service ware)*	1.50

Notes:

5

Calculate Liquid Capacity

Multiply the values obtained from step 1, 2, 3 and 4. The result is the approximate grease interceptor size for this application

Notes:

6

Select Grease Interceptor

Using the approximate required liquid capacity from step 5, select an appropriate size as recommended by the manufacturer.

Notes:

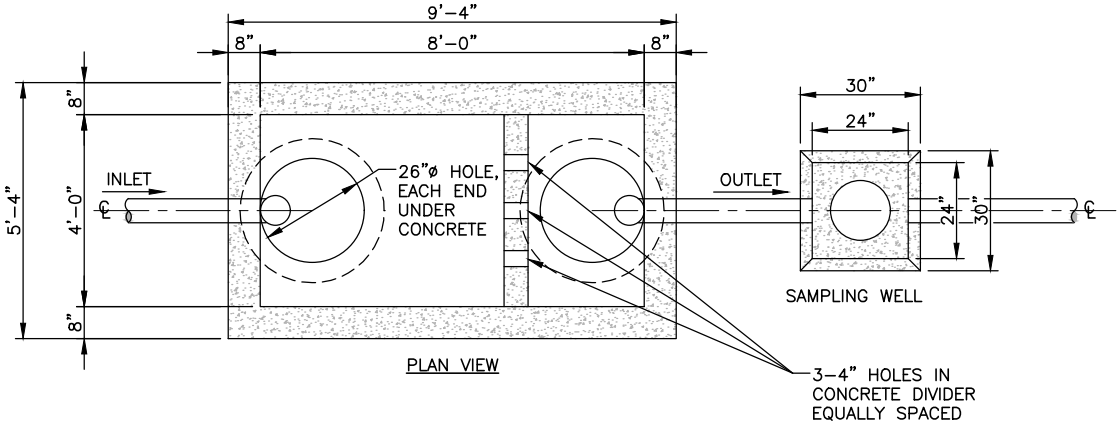

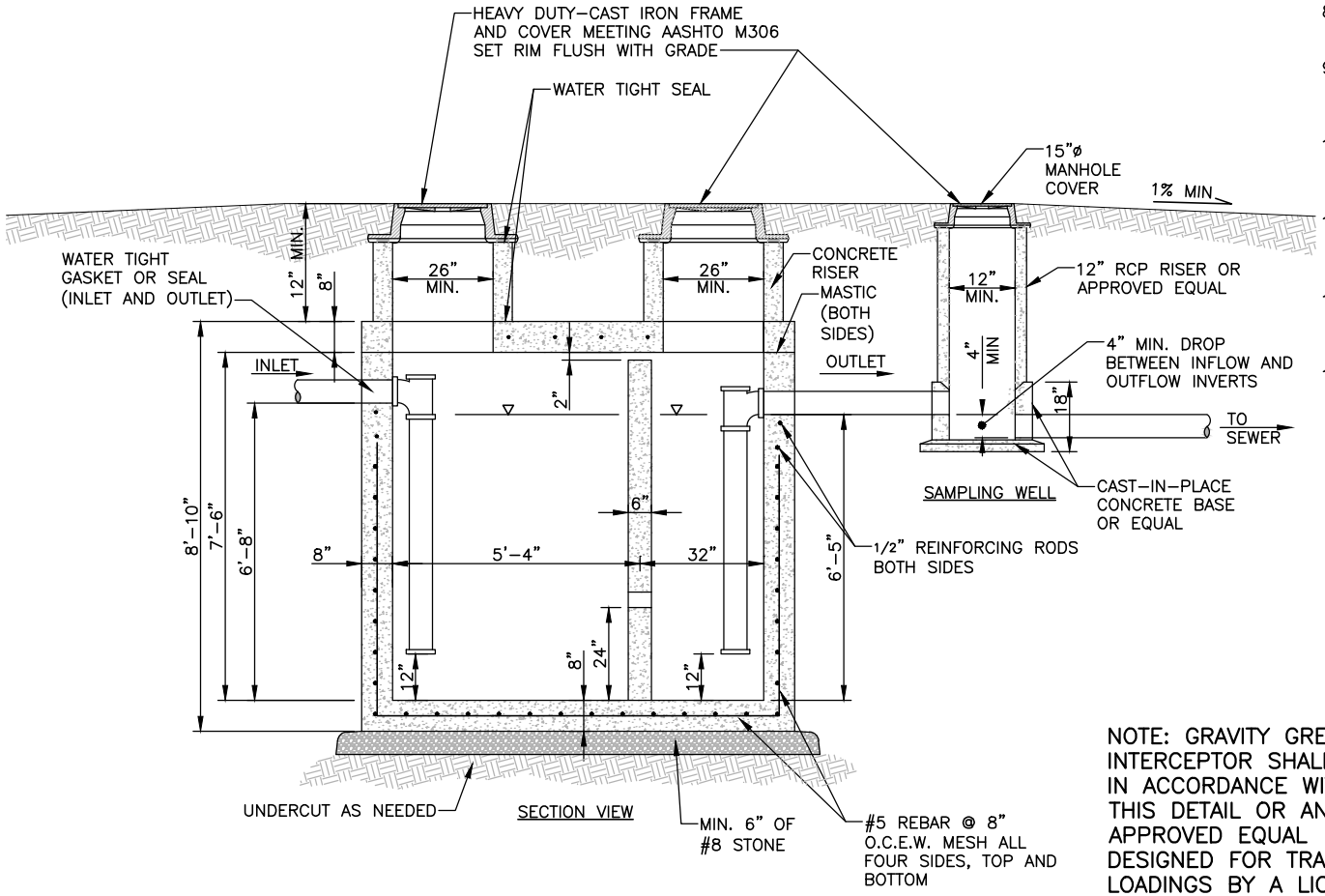

GENERAL NOTES

1. CONCRETE: 28 DAY COMPRESSIVE STRENGTH 5000psi. XYPEX ADDITIVE OR APPROVED EQUAL REQUIRED.
2. STEEL REINFORCEMENT: ASTM A-615, GRADE 60.
3. 1.5" MINIMUM CONCRETE COVER REQ'D. ON ALL REINFORCING STEEL.
4. ALL INTERIOR PIPING SHALL BE MINIMUM 6" SDR 26 PVC.
5. ALL TANK JOINTS SHALL HAVE WATER TIGHT SEALS.
6. EXCAVATION SIDE SLOPES SHALL BE A MINIMUM OF 1:1 OR SHALLOWER IN POOR SOIL CONDITIONS.
7. 4" CLEANOUT SHALL BE INSTALLED WITHIN 10' OF INTERCEPTOR INLET.
8. MULTIPLE INTERCEPTOR FACILITIES MUST HAVE A CLEANOUT BETWEEN EACH INTERCEPTOR.
9. GREASE INTERCEPTOR SHALL BE INSTALLED A MINIMUM OF 10' AWAY FROM SINKS AND DISHWASHERS TO PROVIDE ADEQUATE COOLING OF WASTEWATER.
10. NEW INTERCEPTOR MUST BE FILLED WITH WATER AFTER INSTALLATION TO PREVENT FLOATING UNDER HIGH GROUND WATER CONDITIONS.
11. PLACE #8 STONE BEDDING MINIMUM 6" THICK. UNDERCUT WET OR PUMPING MATERIAL, REPLACING WITH #2 STONE.
12. GRADE SURFACES AROUND INTERCEPTOR AWAY FROM MANHOLE CASTINGS TO MINIMIZE STORM WATER INFILTRATION.
13. GRAVITY GREASE INTERCEPTORS MAY VARY IN SIZE FROM 1,000-2,000 GALLONS. DIMENSIONS MAY VARY ACCORDING TO DESIGN CAPACITY REQUIRED.

NOTE: GRAVITY GREASE INTERCEPTOR SHALL BE IN ACCORDANCE WITH THIS DETAIL OR AN APPROVED EQUAL DESIGNED FOR TRAFFIC LOADINGS BY A LICENSED PROFESSIONAL ENGINEER.

Evansville WATER AND SEWER UTILITY

TRAFFIC RATED GRAVITY GREASE INTERCEPTOR (1,500 GALLON TYPICAL)

DRAWN BY: RMY	CHECKED BY: TGB	SHEET NO
DATE: 8-26-16	SCALE: 1/4"=1'-0"	APPENDIX D

Evansville
WATER AND SEWER UTILITY

Grease Interceptor Sizing Worksheet
Drainage Fixture Unit Method (DFU)

Name of Project: _____ Date: _____

Project Address: _____ Contact Number: _____

Contact Name: _____ Contact E-mail: _____

***Step 1**: Determine the total number of Drainage Fixture Units (DFU's) for the Food Service Facility. If the fixture is known, use "Fixture" column (on left) to determine DFU value. If the fixture is not known or listed, use the "Other Contributors" column (on right) to determine DFU value based on trap size or flow, as applicable. Total all DFU's to determine the "Total Drainage Fixture Unit Value" for the facility.*

Drainage Fixture Unit Values (DFU)

Qty	Fixture	DFU	Total	Qty	Other Contributors	DFU	Total
	Commercial Sink w/ Food Waste	3			1¼ inch trap & trap arm	1	
	Food Preparation Sink	2			1½ inch trap & trap arm	3	
	Wok Sink	3			2 inch trap & trap arm	4	
	Bar Sink	2			3 inch trap & trap arm	6	
	Handwash Sink	2			4 inch trap & trap arm	8	
	Service or Mop Sink	3			Flow of 1.0 to 7.5 gpm	1	
	Food Waste Disposer/Pre-Rinse Sink*	3			Flow of 7.6 to 15 gpm	2	
	Commercial Dishwasher	Based on drain size (table 2)			Flow of 15.1 to 30 gpm	4	
	Floor Drain				Flow of 30.1 to 50 gpm	6	
	Trench Drains**	2/l.f.					

DFU's are derived from the 2012 Uniform Plumbing Code, Tables 702.1, 702.2(a), & 702.2(b).
** Food Waste Disposer/Pre-Rinse Sink requires Solids Interceptor*
*** Use 2 DFU's per lineal foot of Trench Drain.*

Total Drainage Fixture Unit Value: _____

***Step 2**:*
***Hydromechanical Interceptor**: Select Discharge Flow Rate from table below based on the Total DFU Value determined in Step 1. Use manufacturer's product information to select the size and model of an HGI unit based upon minimum flow rate and grease capacity.*
***Gravity Interceptor**: Select Interceptor Capacity (Size) from table below based on the Total DFU Value determined in Step 1. Round up to next size available grease interceptor size (e.g. 45 DFU's would require a 1,250 gallon interceptor.*

Hydromechanical & Gravity Grease Interceptor Sizing Chart

DFU's	HGI Flow Rate (gpm)	HGI Grease Retention Capacity (lbs)	GGI Interceptor Capacity (gal)
10	25	50	-
13	35	70	-
20	50	100	-
35	75	150	1,000
90	-	-	1,250
172	100	200	1,500
216	150	300	2,000
307	-	-	2,500
342	200	400	3,000
428	250	500	4,000
576	350	700	5,000
720	500	1,000	7,500

***Hydromechanical Grease Interceptor**:*
Minimum Flow Rate (gpm): _____
Grease Capacity (lbs): _____
HGI Manufacturer _____
HGI Model # _____
Material _____
Flow-Thru Rating (gpm) _____
Liquid Capacity per Unit (gal) _____
Grease Capacity per Unit (lbs) _____
Number of Units _____
Total Liquid Capacity (gal) _____
Total Grease Capacity (lbs) _____
Days per Pump-Out Cycle _____

***Gravity Grease Interceptor**:*
Minimum Liquid Capacity (gal): _____
Liquid Capacity per Unit (gal) _____
Number of Units _____
Total Liquid Capacity (gal) _____

Information in above table is from tables 703.2, 1014.2.1, 1014.3.6 of the 2012 UPC and 1003.3.4.1 from 2006 IPC

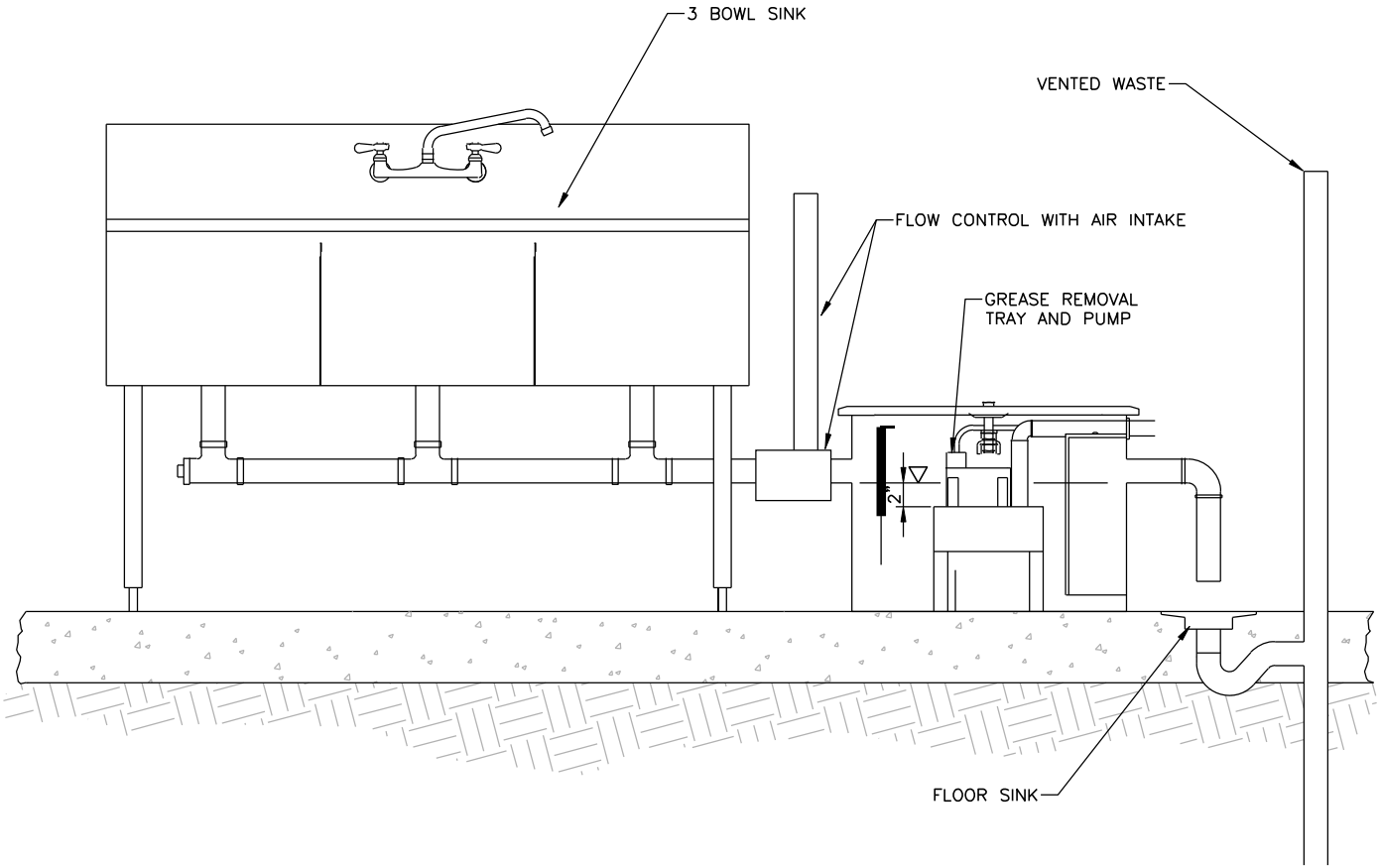

Evansville
WATER AND SEWER UTILITY

HYDRO-MECHANICAL INTERCEPTOR (ABOVE FLOOR INSTALLATION)

DRAWN BY: RMY	CHECKED BY: TGB	SHEET NO
DATE: 10-8-15	SCALE: 3/4"=1'-0"	1
		1 OF 1

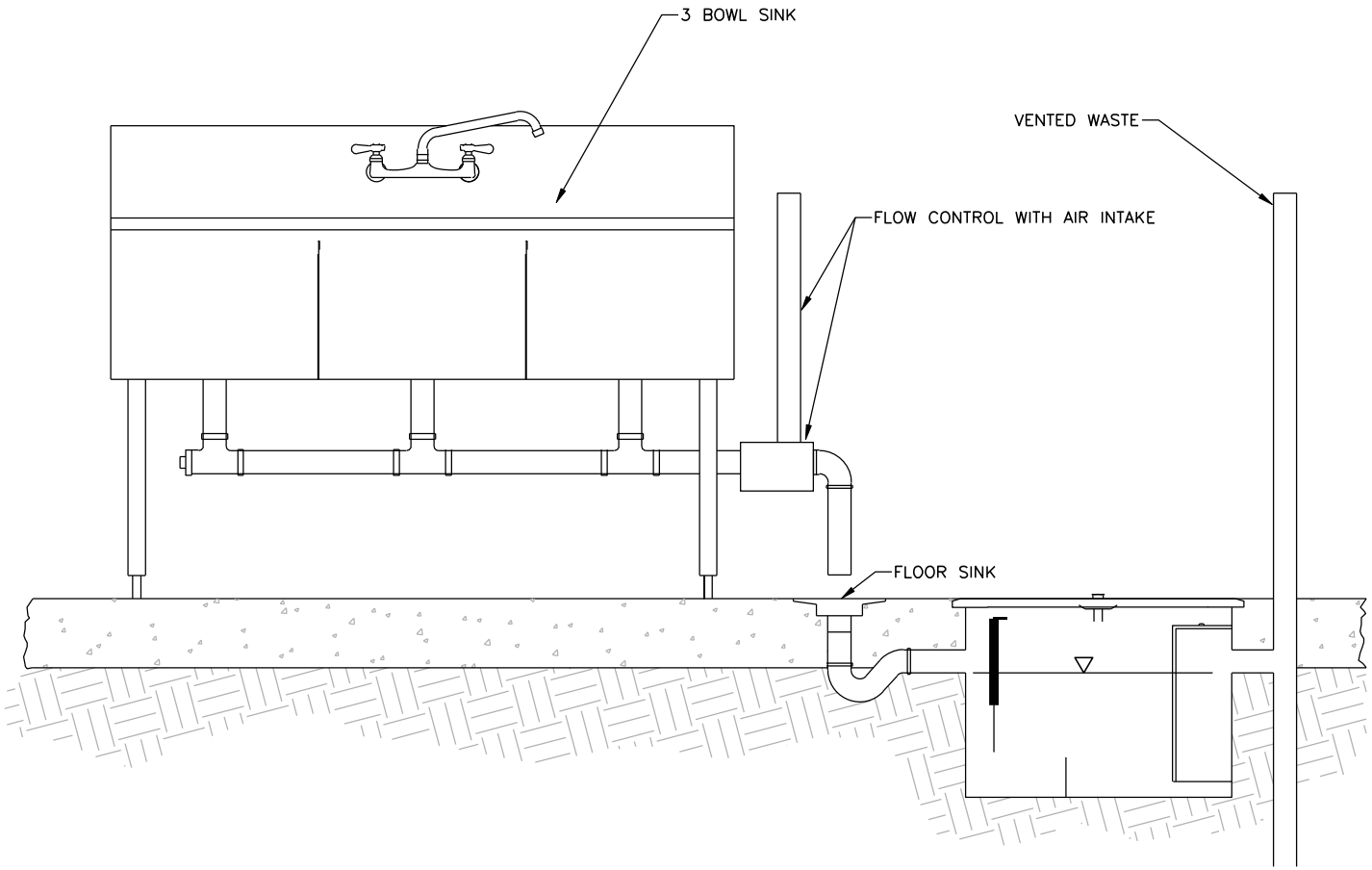

Evansville
WATER AND SEWER UTILITY

HYDRO-MECHANICAL INTERCEPTOR (RECESSED INSTALLATION)

DRAWN BY: RMY	CHECKED BY: TGB	SHEET NO 1
DATE: 10-8-15	SCALE: 3/4"=1'-0"	1 OF 1

Grease Interceptor Maintenance Log

Company Name: _____

Date of Cleaning	Cleaned By: Company or Individual Name	Manifest# (Not applicable if grease trap is self-cleaned)	Quantity of Solids and Grease Removed? (Gallons) Obtain from receipt or manifest	Maintenance Needed?	Where was waste disposed?

IMPORTANT: This form should be used to record the cleaning and maintenance of the grease interceptor.
All records and paperwork MUST be kept on site and available during inspections.
Failure to keep an up-to-date maintenance log may result in fines of up to $500.00

Submit data to:
Fax 812-428-6941
Email fog@ewsu.com

APPENDIX G

Fats, Oils, and Grease (FOG)
Corrective Action Plan & Fine Schedule

Violation Category	Corrective Action/Description	Ordinance or Utility Rule Reference	Compliance Due Date [2]	2nd NOV [1]	3rd NOV [1]	Administrative Compliance Order
Failure to Submit FOG Questionnaire	The User must submit (fax /mail) the questionnaire.	Chapter(s) **13.05.090** Grease, oil or sand traps	**14 days from 1st NOV**	**14 days from 1st NOV *$50* fine**	**28 days from 1st NOV *$200* fine**	**Any non-compliance beyond the 3rd NOV may result in a Compliance Order**
Disallow Inspection	The User must reschedule the inspection with the Inspector.	Chapter **13.05.110** Right of entry and **13.10.180** Right of entry and **13.10.190** Compliance with order	**7 days from original inspection**.	**7 days from 1st Inspection *$250* fine**	**14 days from 1st Inspection *$500* fine**	**Any non-compliance beyond the 3rd NOV may result in a Compliance Order**
Failure to maintain records	The User must keep a maintenance log and manifests on site.	Chapter(s) **13.05.090** Grease, oil or sand traps	**14 days from 1st NOV**	**14 days from 1st NOV *$50* fine**	**28 days from 1st NOV *$250* fine**	**Any non-compliance beyond the 3rd NOV may result in a Compliance Order**
Failure to install/maintain removal devices in properly working order	Grease trap/interceptor needs repair (i.e. baffles, inlet/outlet "T's"), replaced, or installed. *Any discharge to the sewer that has more than 200 mg/l of fats, oils, greases or waxes is a violation.*	Chapter(s) **13.05.090** Grease, oil or sand traps ; **13.20.020** General discharge prohibitions	**30 days from 1st NOV (repairs)** **90 days from 1st NOV (installations)**	**30 days from 1st NOV *$100* fine** **90 days from 1st NOV *$250* fine**	**60 days from 1st NOV *$500* fine** **120 days from 1st NOV *$500* fine**	**Any non-compliance beyond the 3rd NOV may result in a Compliance Order**
Failure to clean outdoor or indoor grease removal devices("25% Rule)	The User must have device cleaned/pumped and fax manifest/log to Fog Coordinator. *The total operating depth of the grease trap/interceptor is more than 25% full (5% settles/bottom, 20% floats/top).*	Chapter(s) **13.05.090** Grease, oil or sand traps ; **13.20.020** General discharge prohibitions	**14 days from 1st NOV**	**14 days from 1st NOV *$50* fine**	**28 days from 1st NOV *$250* fine**	**Any non-compliance beyond the 3rd NOV may result in a Compliance Order**
Source of sanitary or combined sewer overflow	The User must have all maintenance issues fixed to ensure another overflow does not occur.	Chapter(s) **13.05.090** Grease, oil or sand traps; **13.20.020** General discharge prohibitions	**Within 24 Hours of Notice**			

1) Payment of the fee will be required 30 days following issuance of Notice of Violation (NOV).
2) All times are given in calendar days.

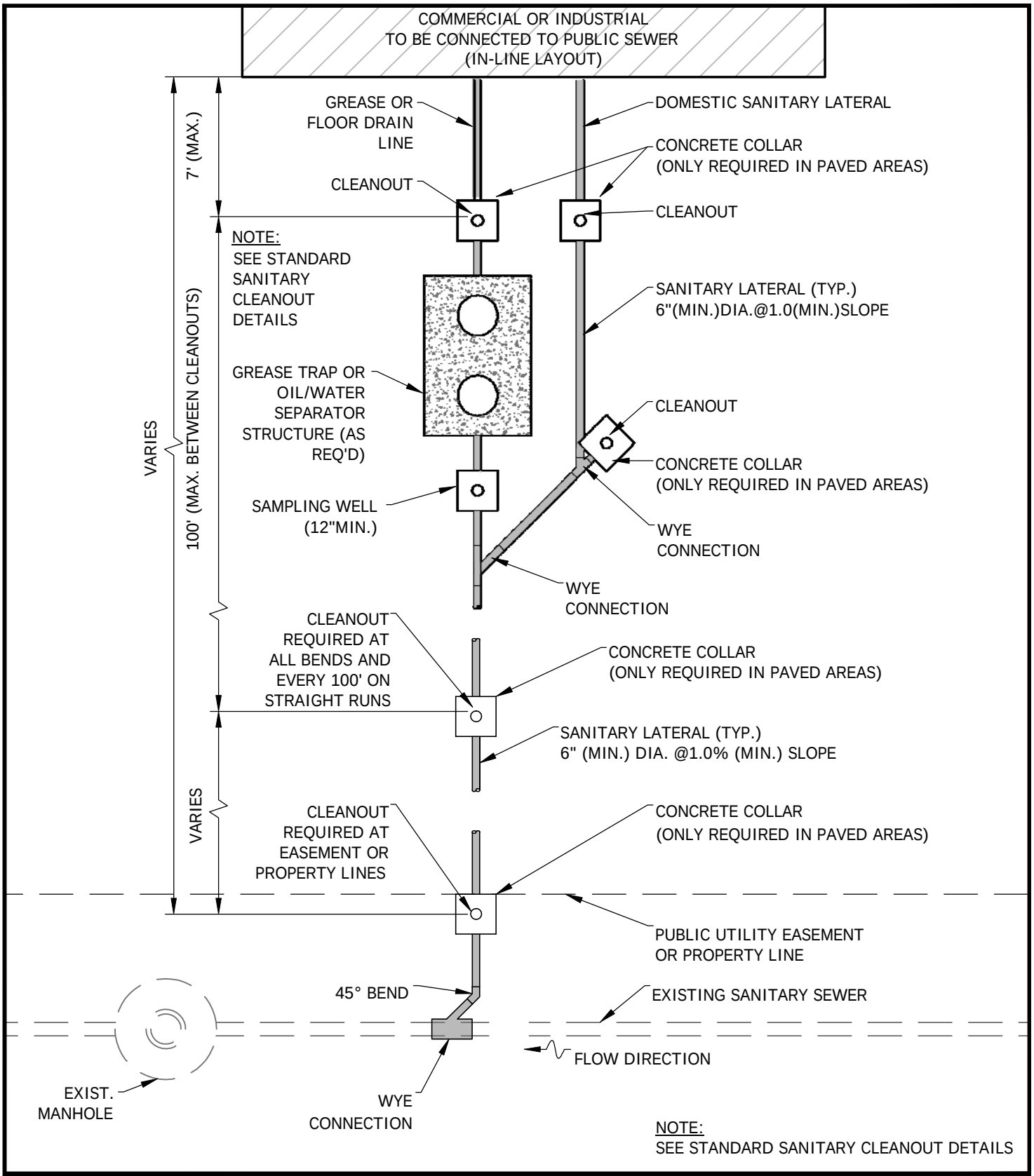

File: J:\ENGINEER\AUTOCAD\Standards\Detail\Drawings\Sewer\FOG\Appendix I-LateralSewerConnectionLayout(Commercial).dwg

Michael D. Labitzke
MICHAEL D. LABITZKE
REGISTERED
No. 19900215
STATE OF INDIANA
PROFESSIONAL ENGINEER
June 20, 2016

Evansville
WATER AND SEWER UTILITY

LATERAL SEWER CONNECTION LAYOUT (COMMERCIAL)

Approved: 06/20/16	Scale: N.T.S.	APPENDIX I
Approved By: Michael D. Labitzke, P.E.		